a

Easy use

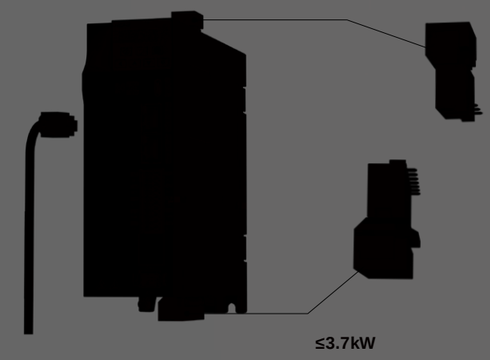

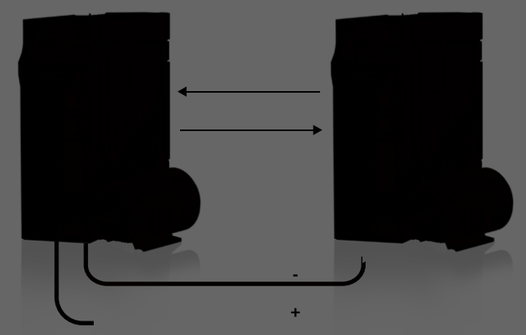

- **DC**

-

/

LED/LCD

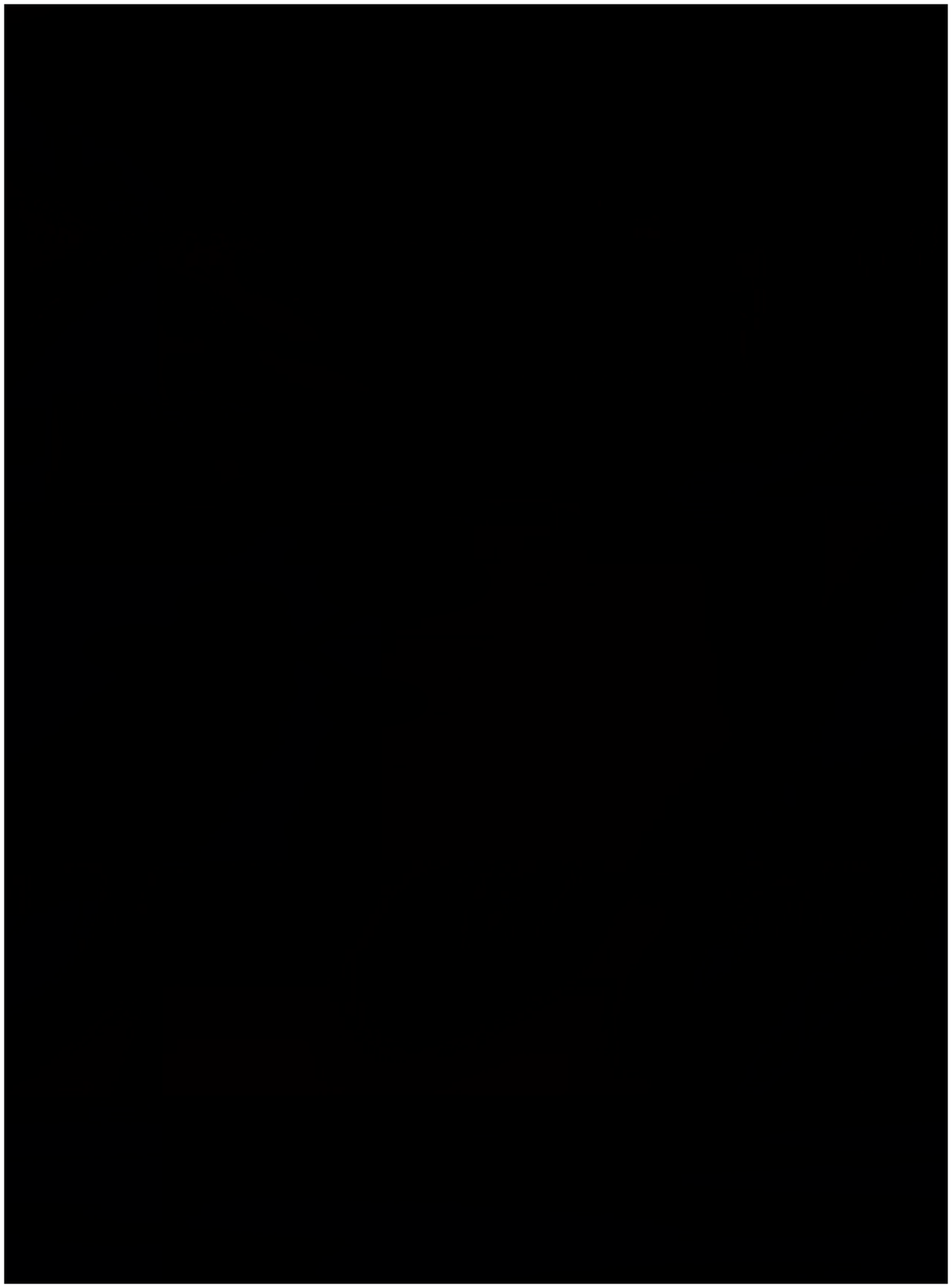

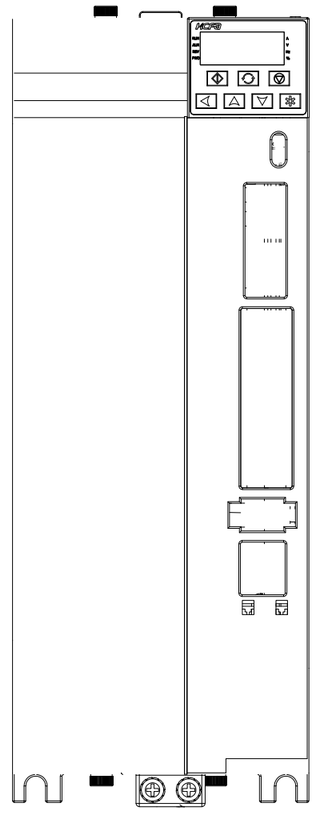

■ E600 AC220V

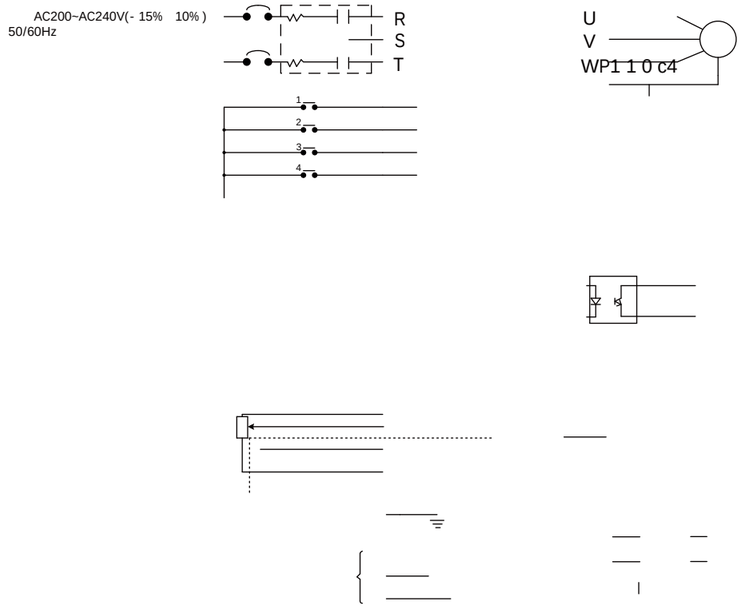

■ E600 AC380V

■ E610 AC220V

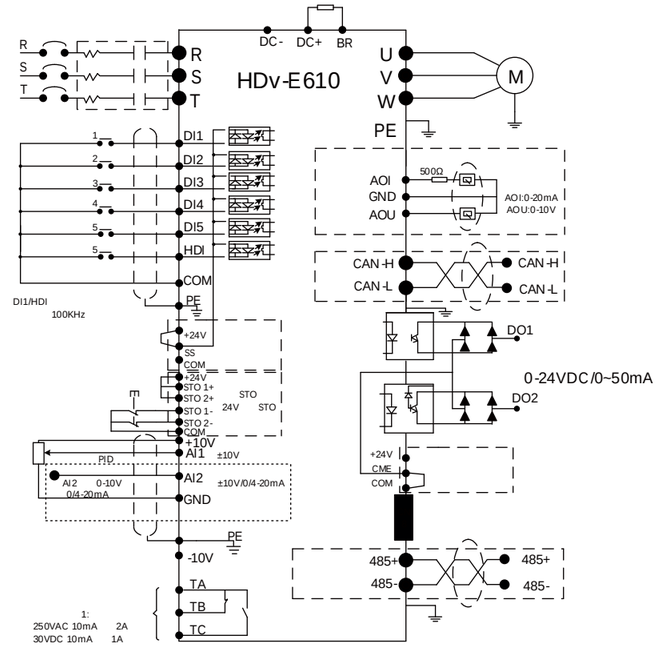

■ E610 AC380V

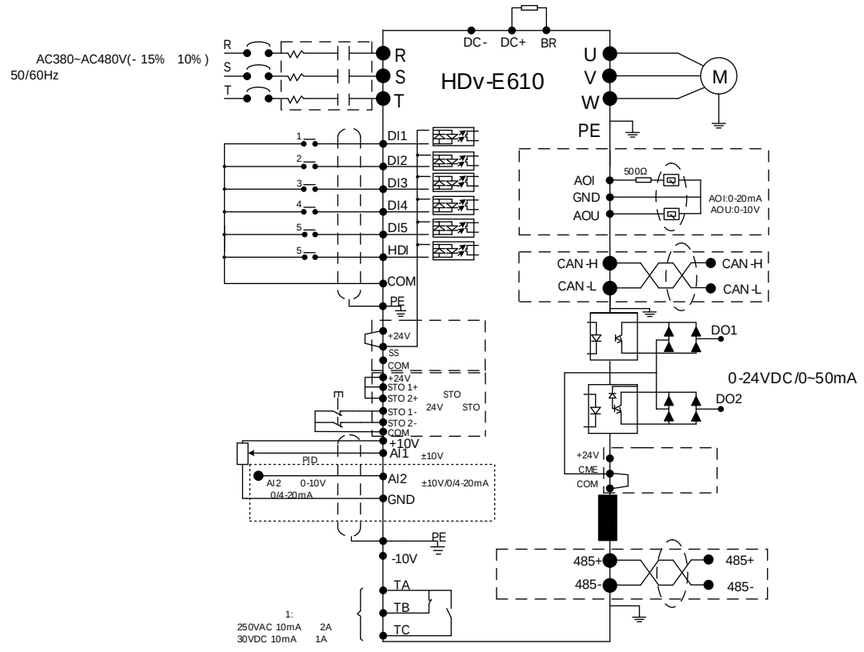

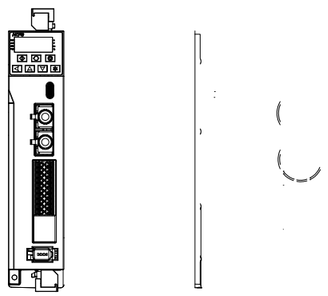

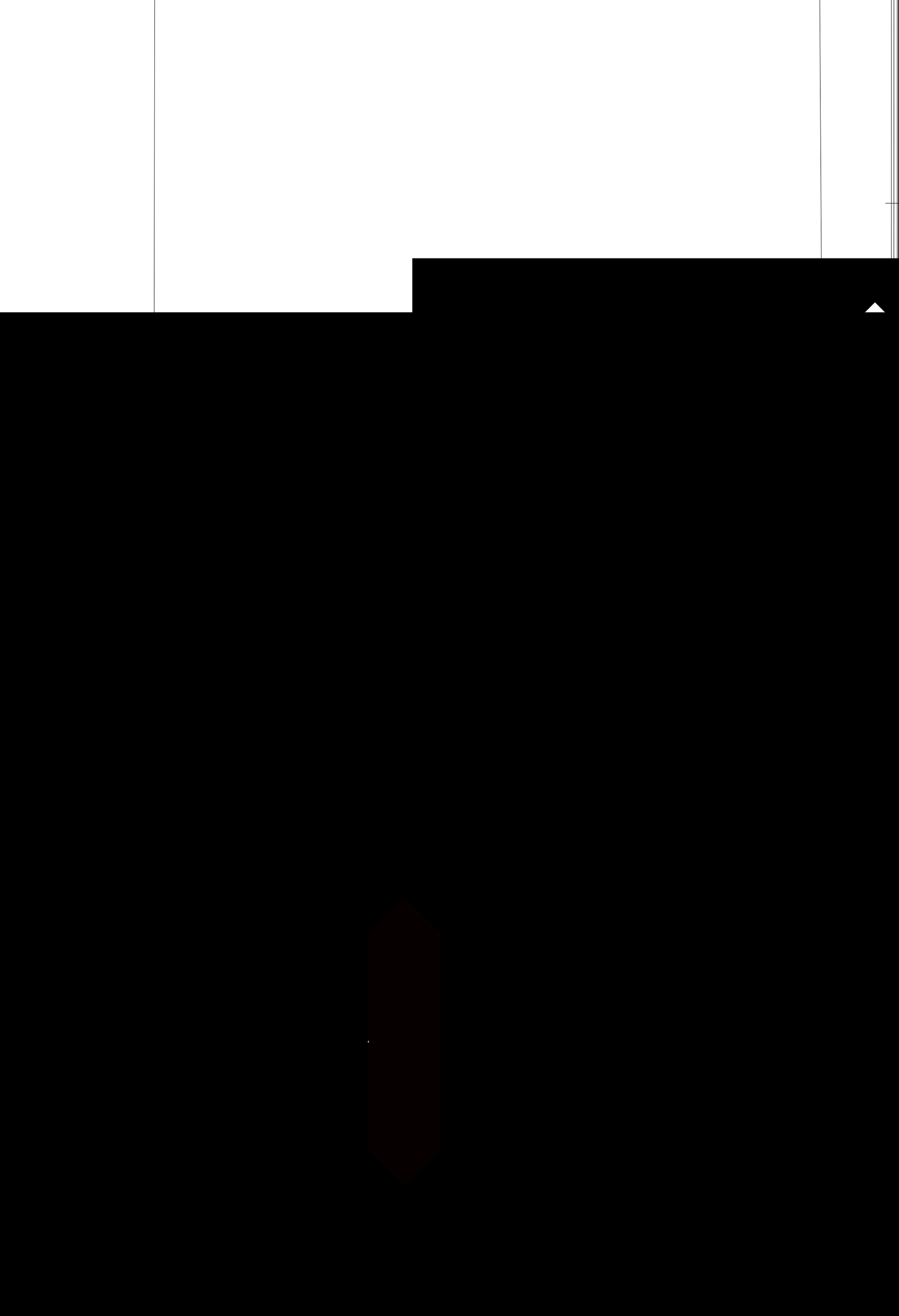

■ **LED**

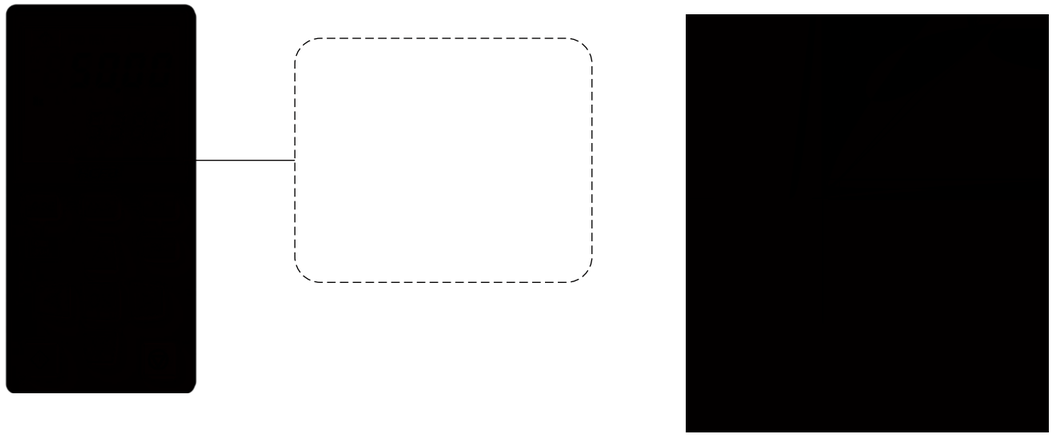

■ **LCD**

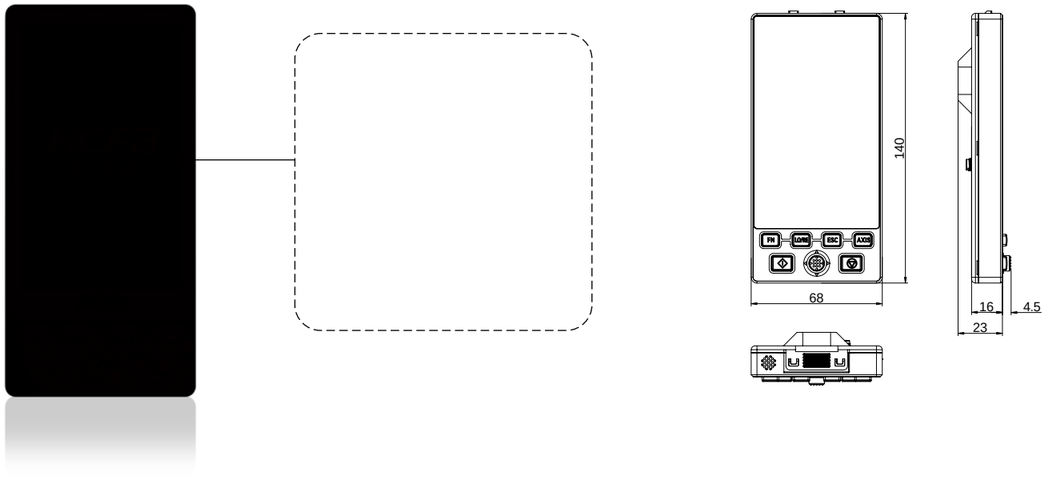

■ EtherCAT

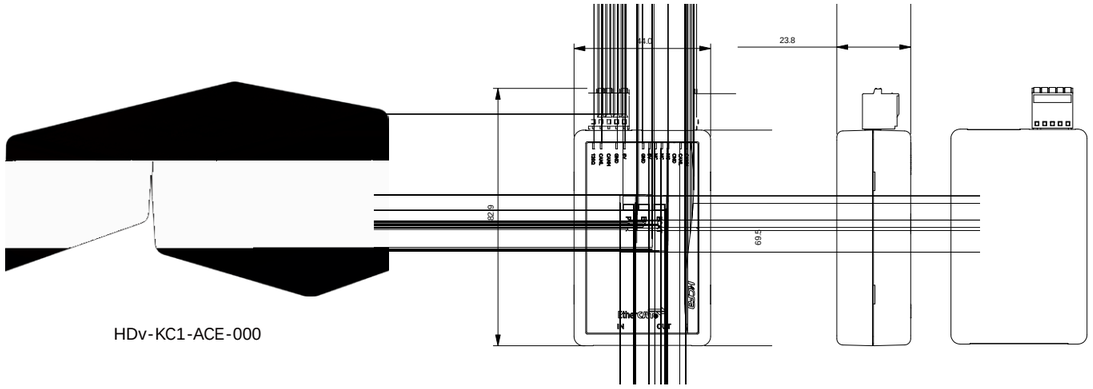

■ EtherCAT

■ HDv-CMC-ECC-000 EtherCAT

E610 EtherCAT

EtherCAT

■ EtherCAT

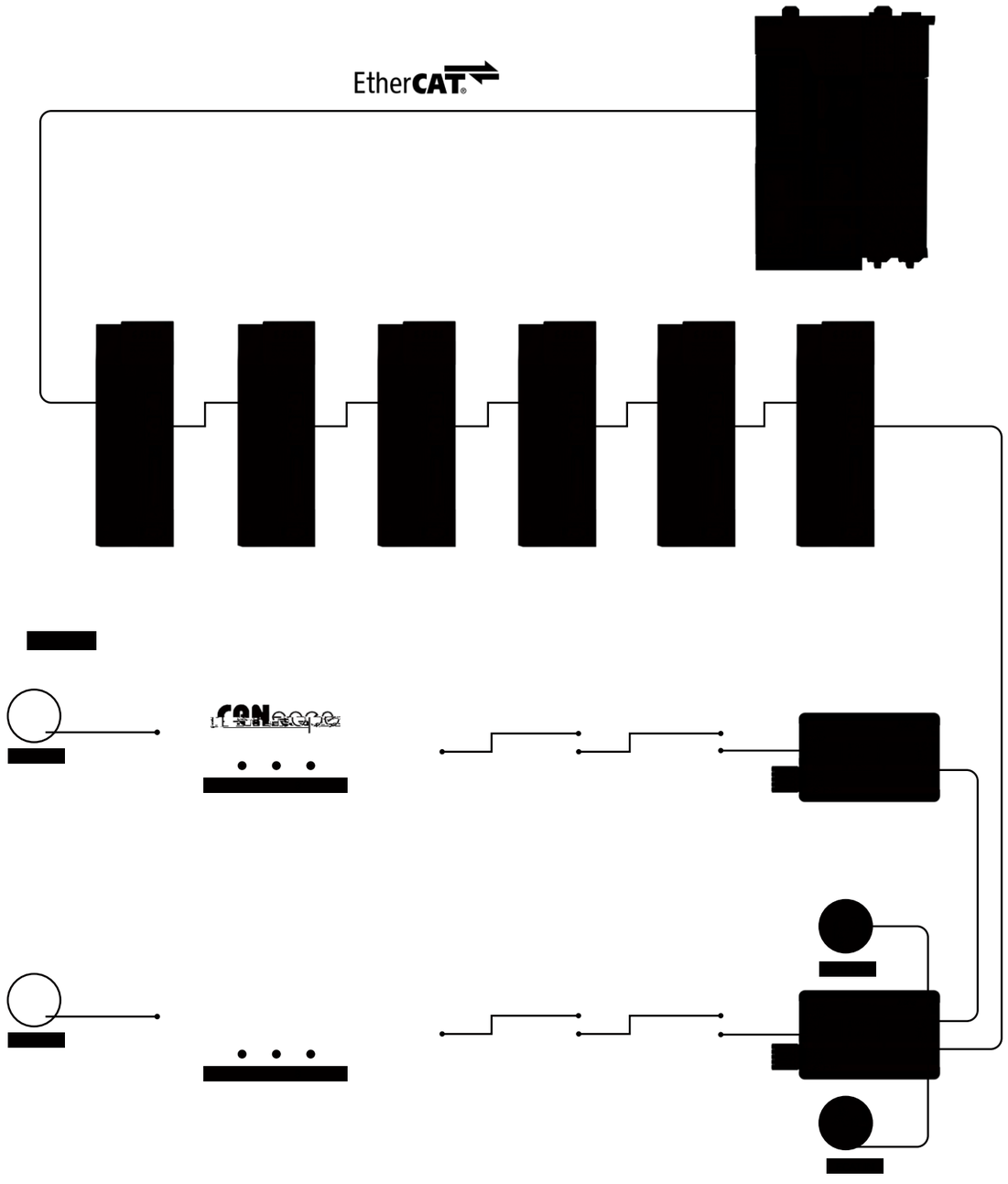

MEMO

Ordering Guide

[redacted]

[redacted]

[redacted]

[redacted]

[redacted]

[redacted]

[redacted]

[redacted]

20%~30%

[redacted]

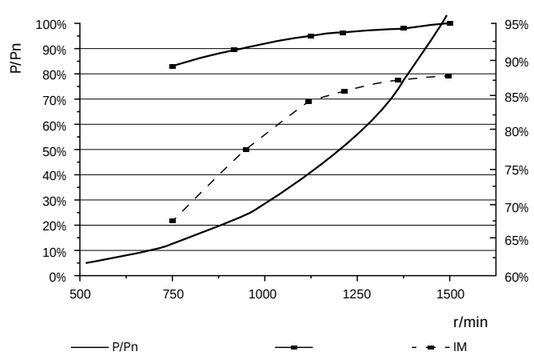

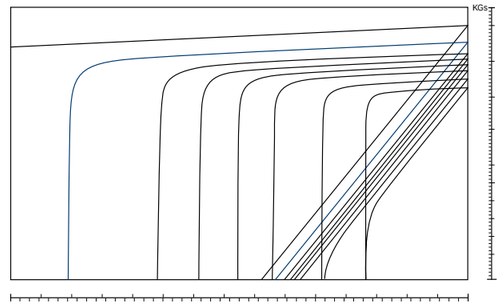

[redacted]

(SynRM) “ ”

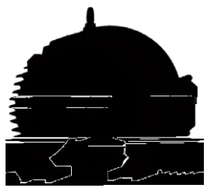

(SynRM)

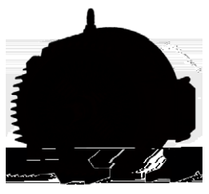

[redacted]

HDv - ME 5 - 112 M 55C 20C B - I B35 T - S F N
⑪ ⑫ ⑬ ⑭

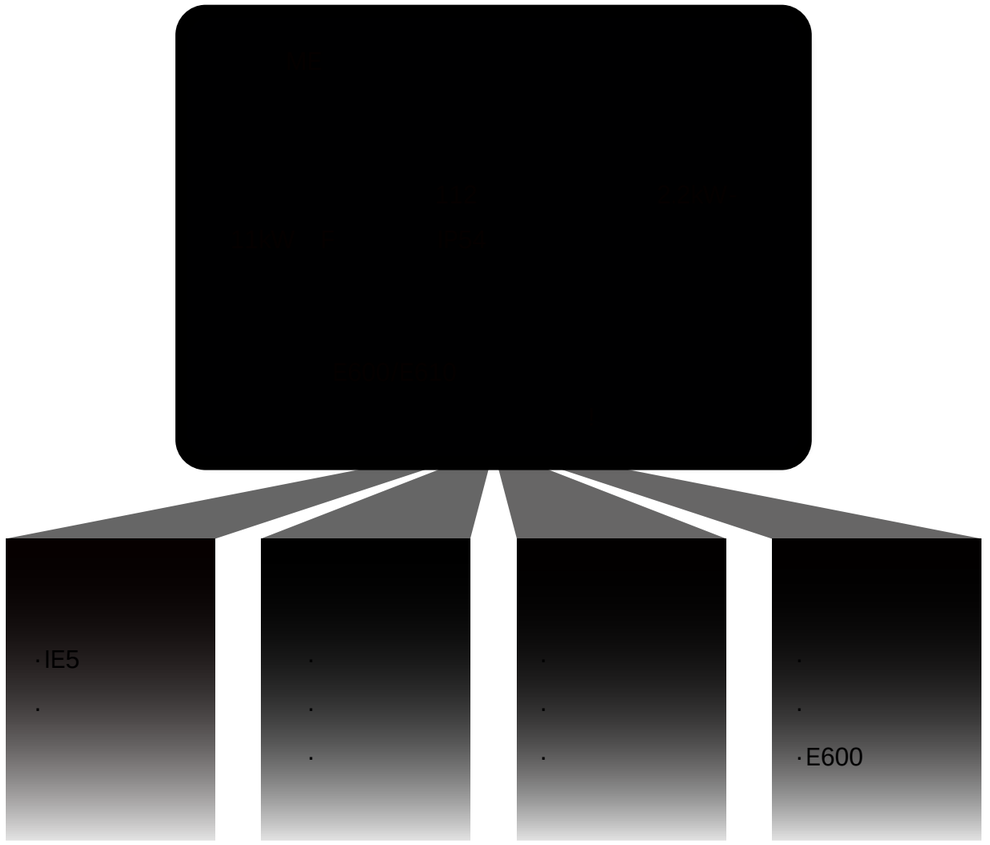

IE5

1-2

2011

2023 11

-
- ASIC SOC
- AMR /